TTARTISAN

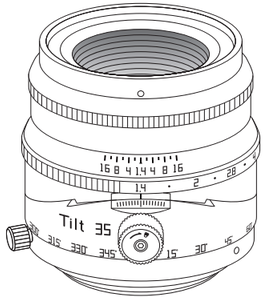

Tilt 35mm F1.4

说明书 INSTRUCTION MANUAL

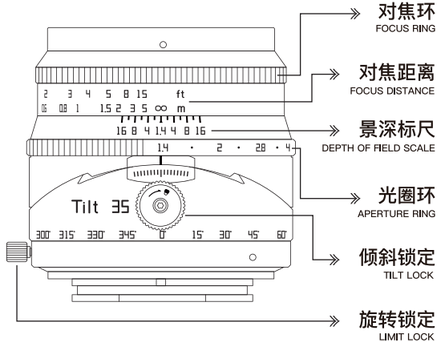

镜头参数 LENS SPECIFICATION

焦段：35mm
Focal length: 35mm

最大光圈：F1.4
Maximum aperture: F1.4

最小光圈：F16
Minimum aperture: F16

画幅：APS-C
Frame: APS-C

对焦方式：手动
Focus method: manual

倾斜角度：8°
Tilt Angle: 8°

卡口：E、X、Z、RF、M43
Lens mount: E\X\Z\RF\M43

滤镜尺寸：52
Filter size: 52mm

最近对焦距离：0.35m
Closest focusing distance: 0.35m

视角：45°
Angle of view: 45°

光圈叶片：10片
Diaphragm Blades：10pcs

光学结构：6组7片
Optical Design: 7 Elements in 6 Groups

旋转角度：360°
Rotation Angle: 360°

重量：341~350g(约)
Weight: around 341~350g

光学结构图
OPTICAL DESIGN

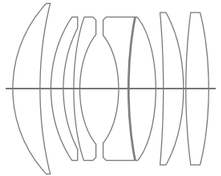

MTF

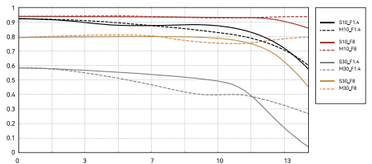



安装镜头 INSTALL THE LENS

把镜头卡口上的圆点对准相机上的圆点，然后顺时针转动镜头，听到“喀”的声音代表镜头已安装到位（安装镜头时请勿按相机上的镜头释放按钮）。

Align the dots on the lens mount with the dots on the camera, and then turn the lens clockwise. When you hear a "click" sound, it means that the lens is in place (do not press the lens release button on the camera when installing the lens).

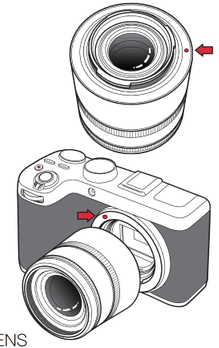

卸载镜头 UNINSTALL THE LENS

按下相机镜头释放的按钮，然后逆时针转动镜头即可取出。
Press the release button, and then turn the lens counterclockwise to remove it.

富士 Fujifilm



索尼 Sony



佳能 Canon

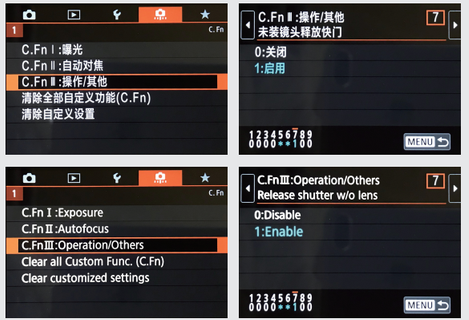

安全提示 WARNING

请勿将镜头或相机对着太阳及其他强光源，以免损伤眼睛。
贮存镜头的环境应避免阳光直射，以免光线汇聚引发火灾。
请勿将镜头放置于儿童易触及的地方，防止不可估量的危险。

Do not point the lens or camera directly at the sun or other strong light sources to avoid eye damage.
The storage environment of the lens should be kept away from direct sunlight, so as not to converge and heat to cause a fire.
Do not place the lens in a place where children can reach it to prevent immeasurable danger.

使用小贴士 TIPS

请在干燥环境下贮存镜头，避免受潮发霉，以免影响成像。
本产品不具有防水功能，使用过程应避开水源。
镜头清洁时，请先用气吹吹几下镜片表面，再用干净、柔软镜头布/纸轻轻擦拭。

Please store the lens in a dry environment to avoid moisture and mold, which may affect the image quality.
This product does not have a waterproof function, so avoid water sources during use.
When cleaning the lens, please blow the surface of the lens several times with air blower, and then gently wipe with a clean,soft lens cloth/paper.

以座右铭·匠心永隽

The Thinking Artisan